21
09
22

Molten Carbonate Fuel Cells for onboard applications

Barbara Bosio

Professor of Applied Physical Chemistry at the University of Genoa

First Decarbonization Seminar

ECOSPRAY

What experience does UNIGE have on fuel cells?

Department of Civil, Chemical and Environmental Engineering (DICCA)

- 25 years of scientific research activity
- 15 years of collaboration with Ansaldo Fuel Cells
- 3 years of research with ExxonMobil (EMRE, New Jersey)
- 5 years of experimental tests at KIST (Seul)
- 5 European Projects with relevant partners

- Modelling and experimentation at different scales
- ''Gas to power'' as well as ''power to gas'' applications
- Around 100 scientific papers, 100 degree theses, 10 PhD

In particular, the speaker is

- UNIGE referent for European Energy Research Alliance
- Italian delegate expert in fuel cells at International Maritime Organization (IMO)

Just an example of the approach…

Electrode

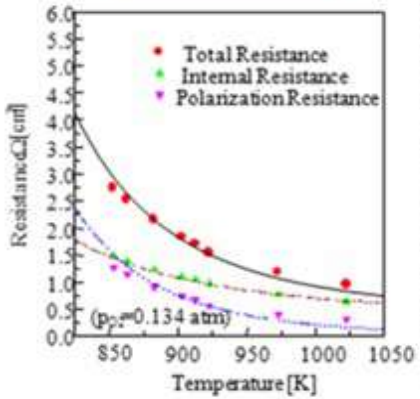

Single cell

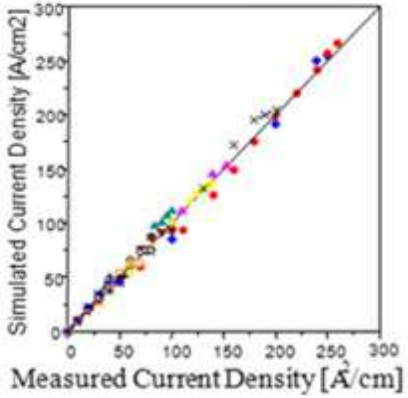

Stack

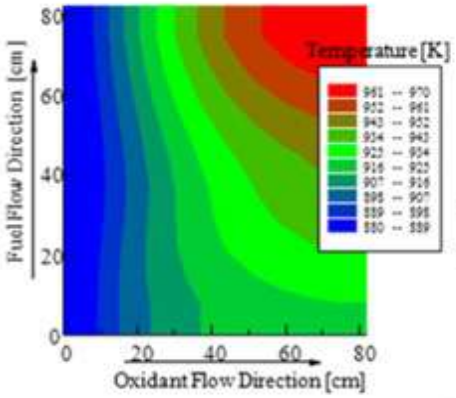

Plant

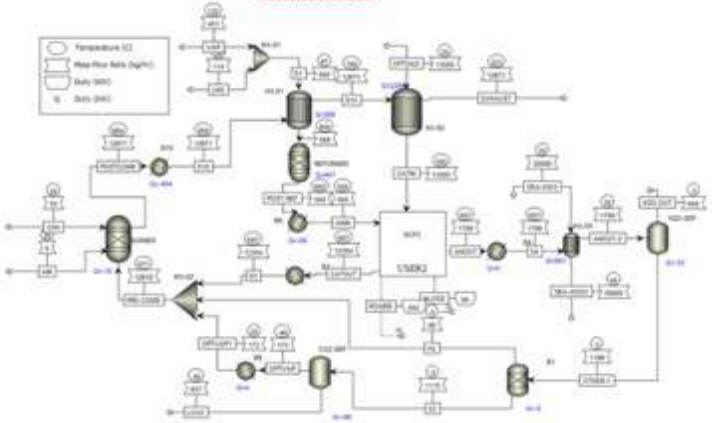

MULTI-SCALE MODELLING

EXPERIMENTATION

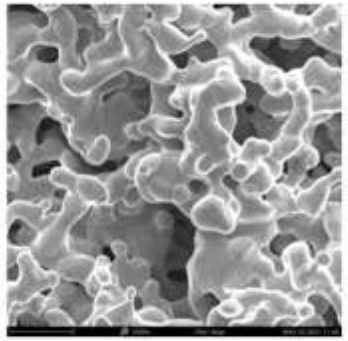

What are fuel cells?

Fuel Cells are electrochemical devices able to directly convert the fuel chemical energy in electrical energy

Advantages

- High efficiency, reduced environmental impact both chemical and acoustic, absence of moving parts, size flexibility and modularity

Fuel Cell Types

- **Low operating temperature** → mainly automotive and small applications
- **High operating temperature** → mainly residential and industrial applications

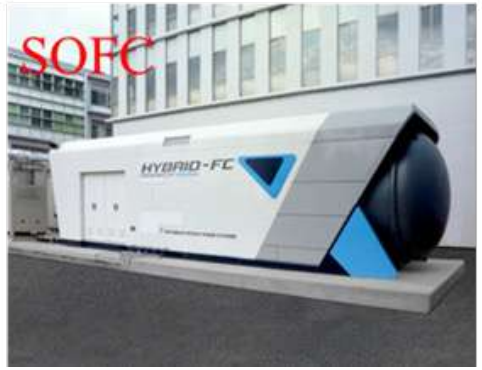

Why choose Molten Carbonate Fuel Cells (MCFCs)?

Better than low temperature fuel cells, because…

- MCFCs can be fed by **natural gas, methane, biogas, syngas and other fuels**
- MCFCs are less sensitive to contaminants
- MCFCs can use less expensive electrode materials
- MCFCs can allow cogeneration thanks to high temperature exhaust

Better than other high temperature fuel cells, because…

- MCFCs present less complex component structure
- MCFCs can be scaled up to higher installed power and with higher efficiency
- MCFCs have lower operating temperature avoiding related material problems
- MCFCs have a **higher technology readiness level**

A further trump card of MCFCs: carbon capture!

MCFCs can be used as CO_2 concentrators in carbon capture applications

$CO_2 + \frac{1}{2} O_2 + 2e^- \rightarrow CO_3^{--}$ cathode

$H_2 + CO_3^{--} \rightarrow H_2O + CO_2 + 2e^-$ anode

$H_2 + O_2 \rightarrow H_2O$ + electrical power + heat

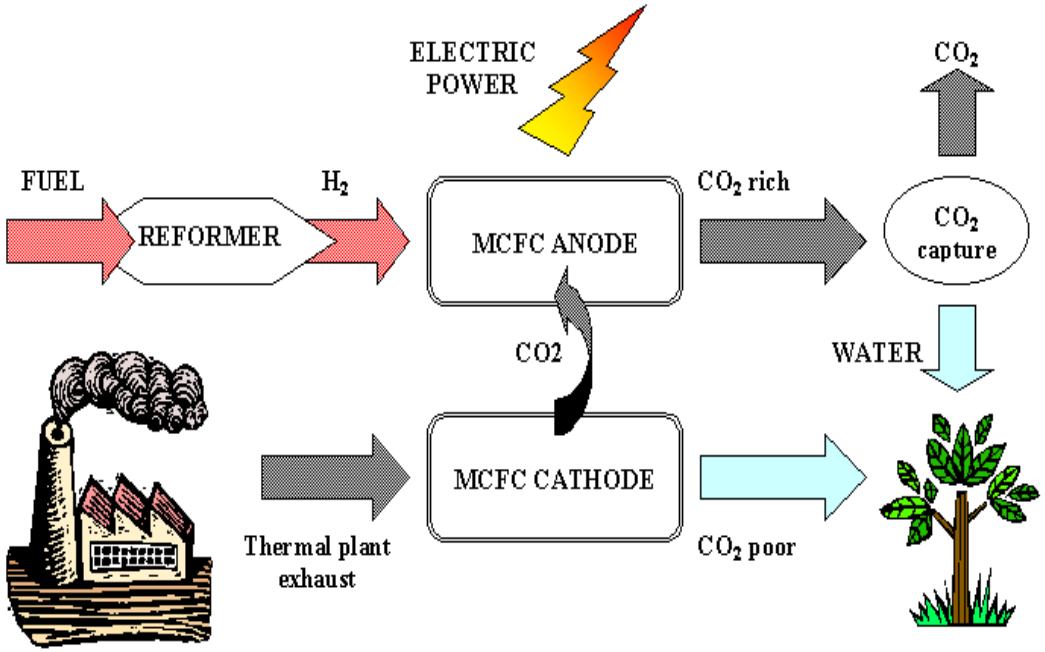

Highlights

- CO_2 fed to the cathode can be captured up to 90%
- MCFC can effectively treats also exhaust with low CO_2 % (around 5%$_v$)
- CO_2 transferred to the anode can be easily segregated
- Power production with 50-55% electrical efficiency

MCFCs are an "active" solution which reduces costs combining carbon capture and power production

How to use MCFCs in maritime applications?

Part of engine exhaust is fed to MCFCs which capture CO_2 producing energy

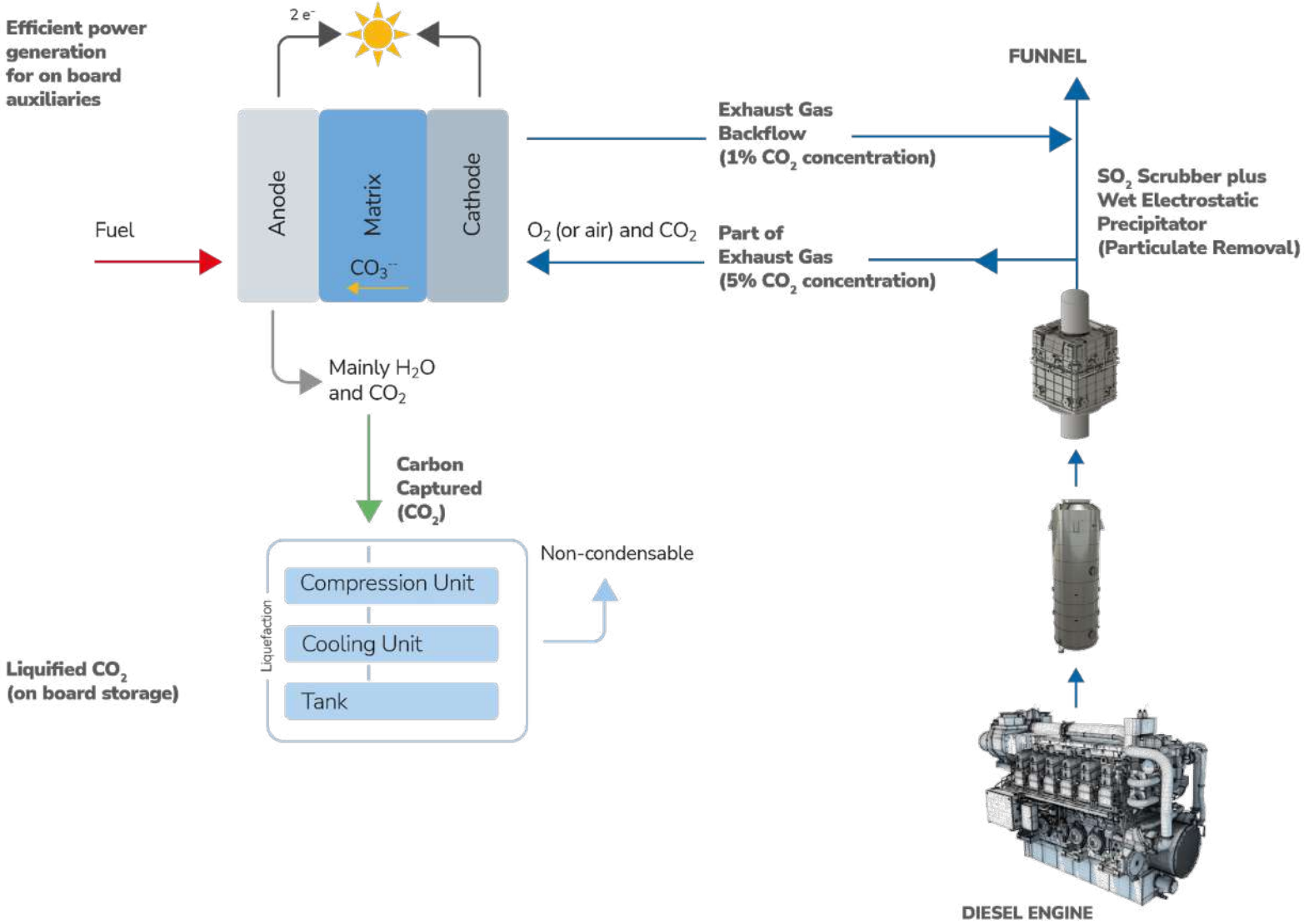

Why MCFCs onboard can be a winning solution?

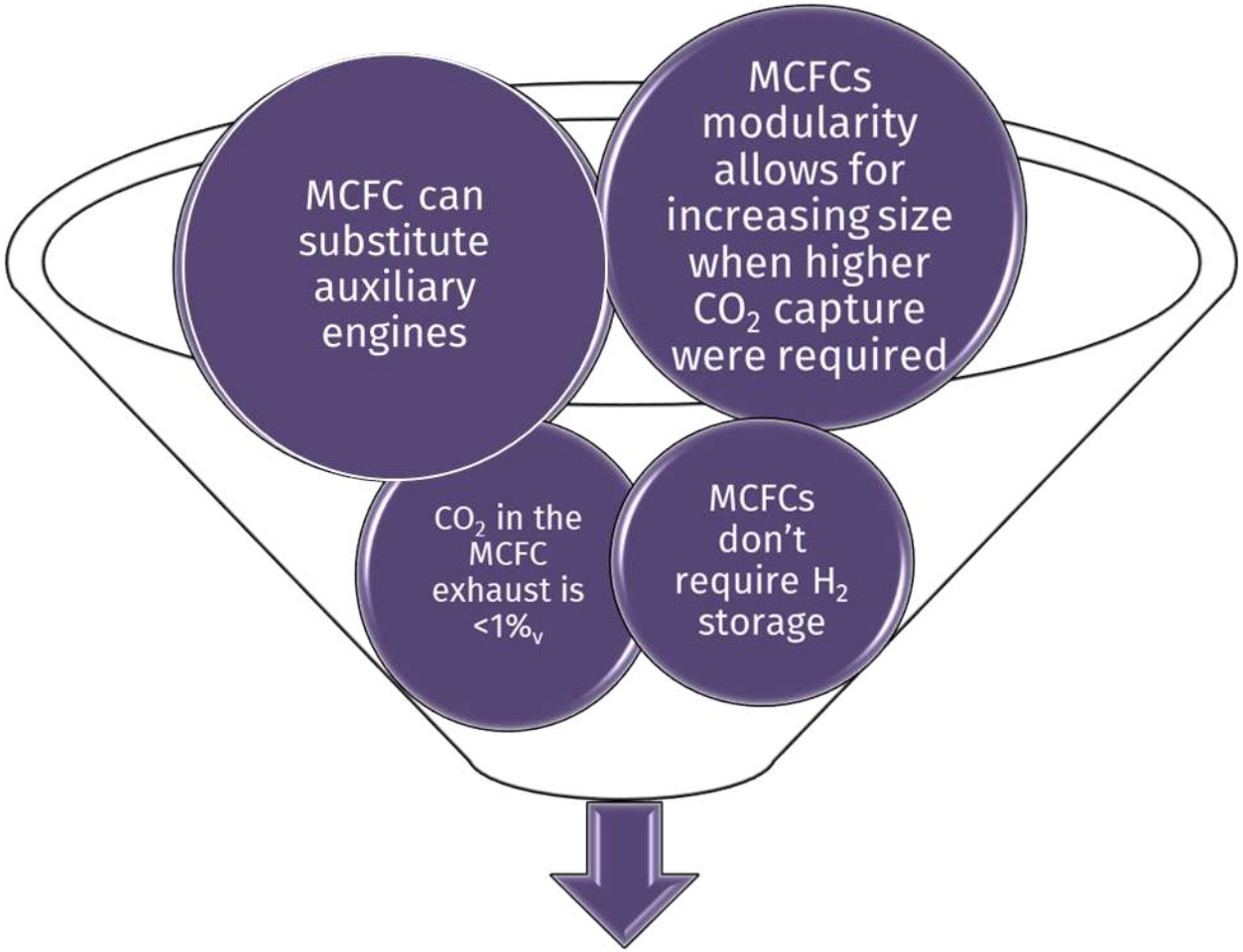

CO_2 emission constrains can be respected just with a retrofitting action, while other fuel cell solutions require new ship assessment and propulsion choice

What perfomance is expected?

Case study

- Engine output: 10 MW
- Engine fuel: HFO (comparable results using LNG)
- CO_2 emission reduction: 20%
- MCFC fuel: **LNG** → **bio-LNG** → **super bio-LNG**

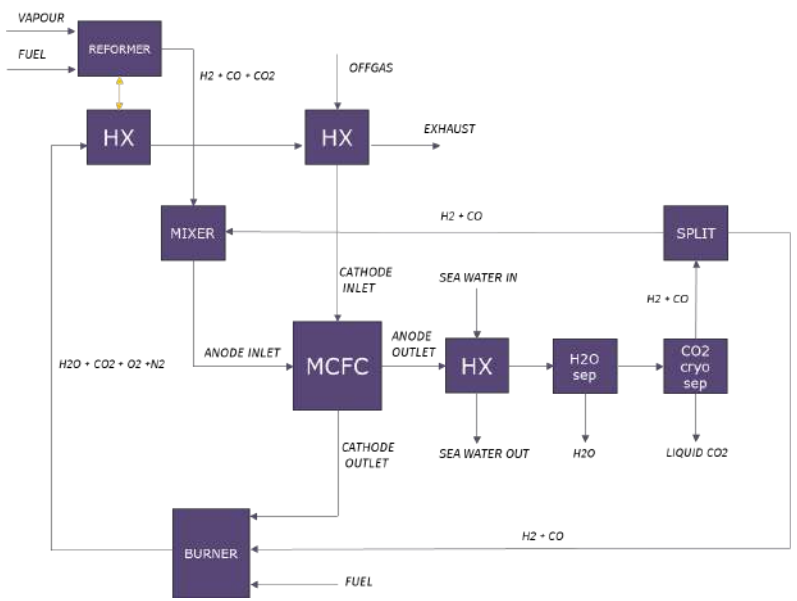

Simulation results based on plant process analysis as well as detailed electrochemical kinetics validated on experimental data

- MCFC size: **1187 kW** → **766 kW** → **591 kW**
- CO_2 stored: **1576 kg/h** → **975 kg/h** → **785 kg/h**
- Fuel consumed by MCFC: **247 kg/h** → **149 kg/h** → **123 kg/h**

Note: bio-LNG = carbon-neutral → super bio-LNG = carbon-negative

$$\begin{cases} V = E_{CO_3^=} - J_{CO_3^=} R_{conc,CO_2} - J R_{External} \\ V = E_{OH^-} - J_{OH^-} R_{conc,H_2O} - J R_{External} \\ J = J_{CO_3^=} + J_{OH^-} \\ R_{External} = R_{conc,H_2} + R_{conc,O_2} + R_\Omega \end{cases}$$

$$R_\Omega = P_{\Omega,1}\, e^{\frac{P_{\Omega_2,2}}{T}}$$

$$R_{conc,CO_2} = -\left(\frac{y_{H_2O,average}}{y_{CO_2,average}}\right)\frac{P_{CO_2,1}\,T}{J_{CO_3^{2-}}}\ln\left(1 - \frac{J_{CO_3^{2-}}}{P_{CO_2,2}\, e^{\frac{P_{CO_2,3}}{T}}\, p\, y_{CO_2,average}}\right)$$

$$R_{conc,H_2O} = -\left(\frac{y_{CO_2,average}}{y_{H_2O,average}}\right)\frac{P_{H_2O,1}\,T}{J_{OH^-}}\ln\left(1 - \frac{J_{OH^-}}{P_{H_2O,2}\, e^{\frac{P_{H_2O,3}}{T}}\, p\, y_{H_2O,average}}\right)$$

$$R_{conc,H_2} = \frac{P_{H_2,1}\,T\, e^{\frac{P_{H_2,2}}{T}}}{p\ln(1+y_{H_2})} \qquad R_{conc,O_2} = P_{O_2,1}\,T\, e^{\frac{P_{O_2,2}}{T}}\, p^{0.5}\,\frac{y_{CO_2,average}}{y_{O_2,average}^{0.5}}$$

What are we doing?

CapLab
ELECTROCHEMICAL CELLS

To develop MCFC technology at each level, we are promoting a strong European task force and we launched the new CapLab laboratory joined between Ecospray and the University of Genoa.

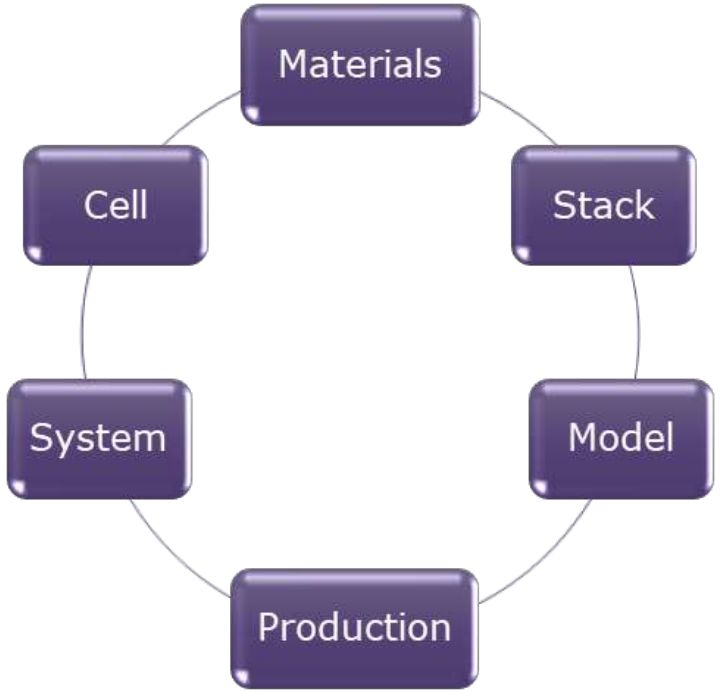

Università di Genova + ECOSPRAY technologies for the planet

ELECTROCHEMICAL CELLS
FOR CARBON CAPTURE &
ENERGY TRANSITION

UniGe | DICCA

UniGe

DICCA

Barbara Bosio

barbara.bosio@unige.it