21
09
22

# $CH_4$ and $CO_2$ Micro-liquefaction

*Carlo Maria Bartolini*

Professor of Energy and Environmental Systems
and CEO of S.TRA.TE.G.I.E.

**Micro LNG**
*Bio and fossil*

**$CO_2$**
*Capture and liquefaction*

***Joint-venture with***

**ECOSPRAY**

**2018**

**Industrialization**

**Design of several plant**

**2010**

**2006**

**Prototipe, tests, simulation analysis**

**2005**

**Methane and $CO_2$ liquefaction** *from the foundation*

**S.TRA.TE.G.I.E.** srl

S.TRA.TE.G.I.E. srl

A spinoff of Marche Polithecnic University

From 2005, a bridge from **innovative idea** to **industrial products**

Solar Energy

Micro-turbine

ORC

# Basics on gas liquefaction

All gases can be liquefied, but only happens under certain conditions of pressure and **temperature**.

For all gasses exits a **Critical Temperature** above which liquefaction is not possible.

**$CH_4$**

**Critical Temperature is -82.62 °C** (45,96 bar)

At atmospheric pressure at **-161.52 °C.**

**$CO_2$**

**Critical Temperature is +31.00 °C** (73,75bar)

At atmospheric pressure at **-78.50 °C.**

**CRYOGENIC TECHNOLOGIES**

Heat exchange with a colder fluid, such as liquid nitrogen which, by evaporating, cools the gas

**Thermodynamic system**

By means of a cryogenic machine like the Stirling cryocooler.

- Expansion through a dissipating valve (Linde cycle)
- Expansion through an expander (Reverse Brayton, Claude, etc.)

# Basics on gas liquefaction

All gases can be liquefied, but only happens under certain conditions of pressure and **temperature**.

For all gasses exits a **Critical Temperature** above which liquefaction is not possible.

**$CH_4$**
**Critical Temperature is -82.62 °C** (45,96 bar)
At atmospheric pressure at **-161.52 °C.**

**$CO_2$**
**Critical Temperature is +31.00 °C** (73,75bar)
At atmospheric pressure at **-78.50 °C.**

**CRYOGENIC TECHNOLOGIES**

Heat exchange with a colder fluid, such as liquid nitrogen which, by evaporating, cools the gas.

**Thermodynamic system**

By means of a cryogenic machine like the Stirling cryocooler.

| | |
|---|---|
| advantages | Simplicity and possibility of subcooling |
| disadvantages | only for small flow rates |

## Linde Cycle

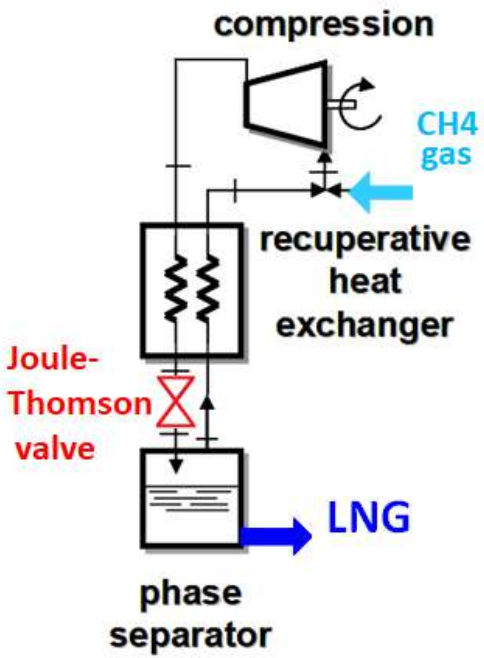


Simplicity, stability and reliability.
Excellent up to 25 t/d.
High specific consumption also with high flow rates.
Impossible the subcooling.

## Linde-Claude Combined Cycle

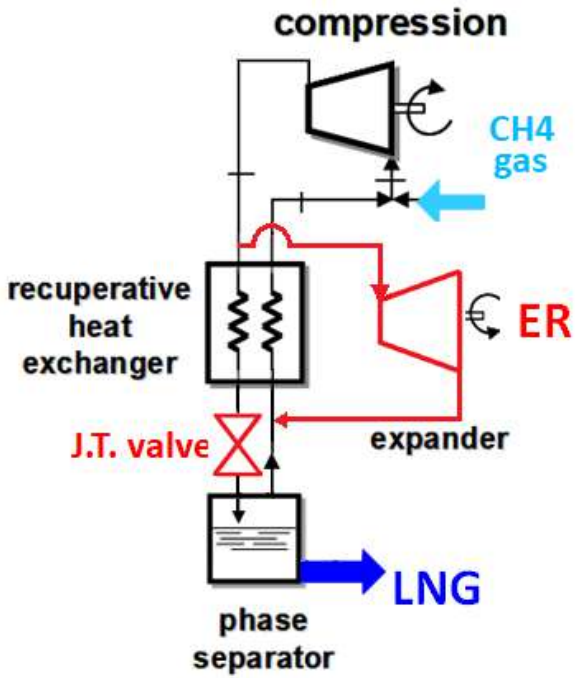


Overall efficiency can be increased by recovering the work of the expander.
System complication and cost of the expander prevents its application with low flow rates.

## Chiller: Brayton Reverse Cycle

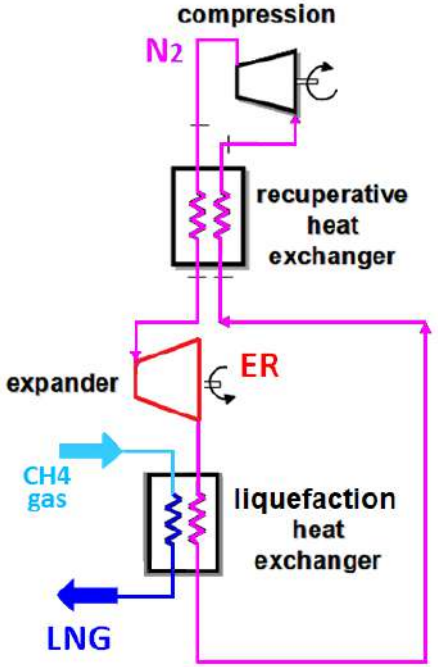


High energy efficiencies and subcooled LNG production.
Sophisticated and expensive technology, difficult application with low flow rates.

Each technology has a rewarding feature
but also some penalties

Every application and plant size sees
one technology better than the others

***We prefer the Linde Cycle scheme, for the reliability and low costs.***

*We are also developing a new solution with cryo-chiller*
*able to* ***reduce consumption*** *and achieve* ***LNG subcooling***

# Our Linde Cycle Scheme

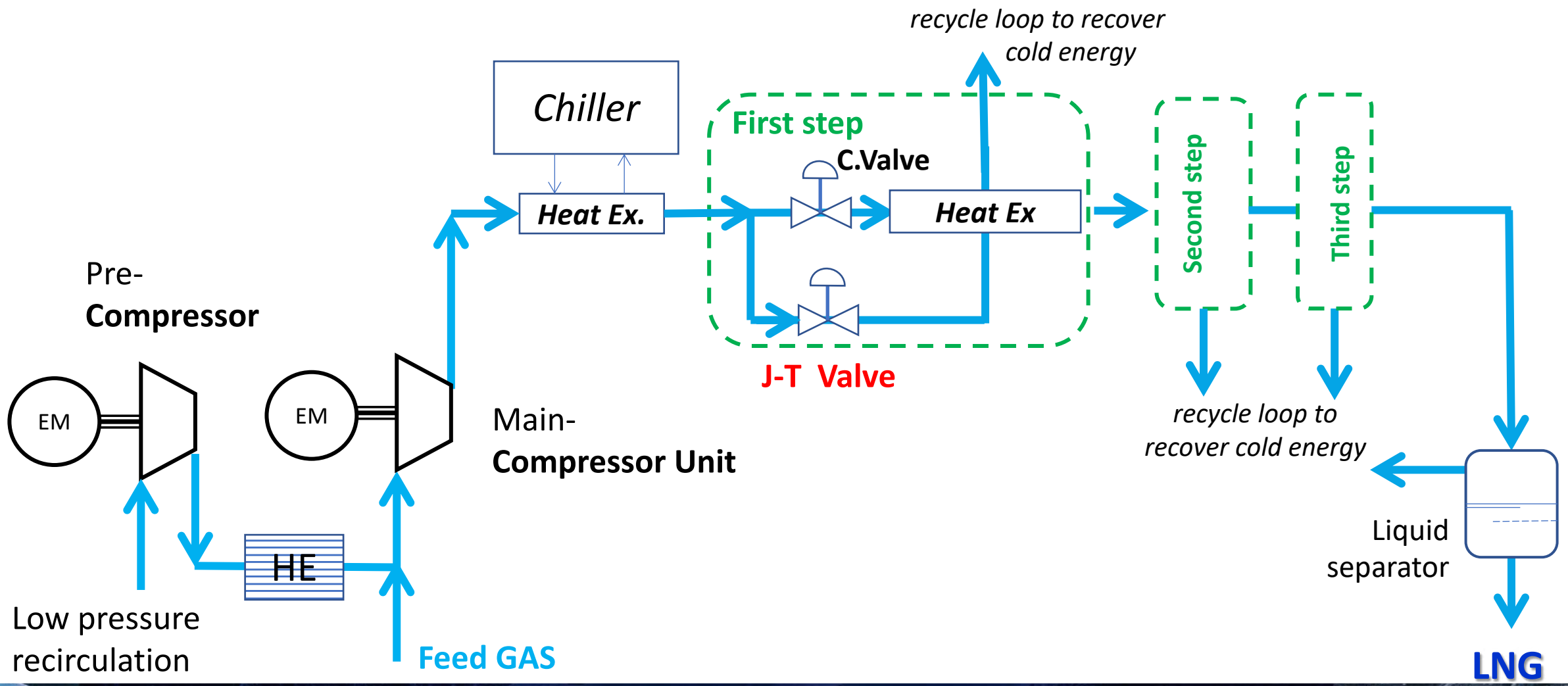

# Our Linde Cycle Scheme

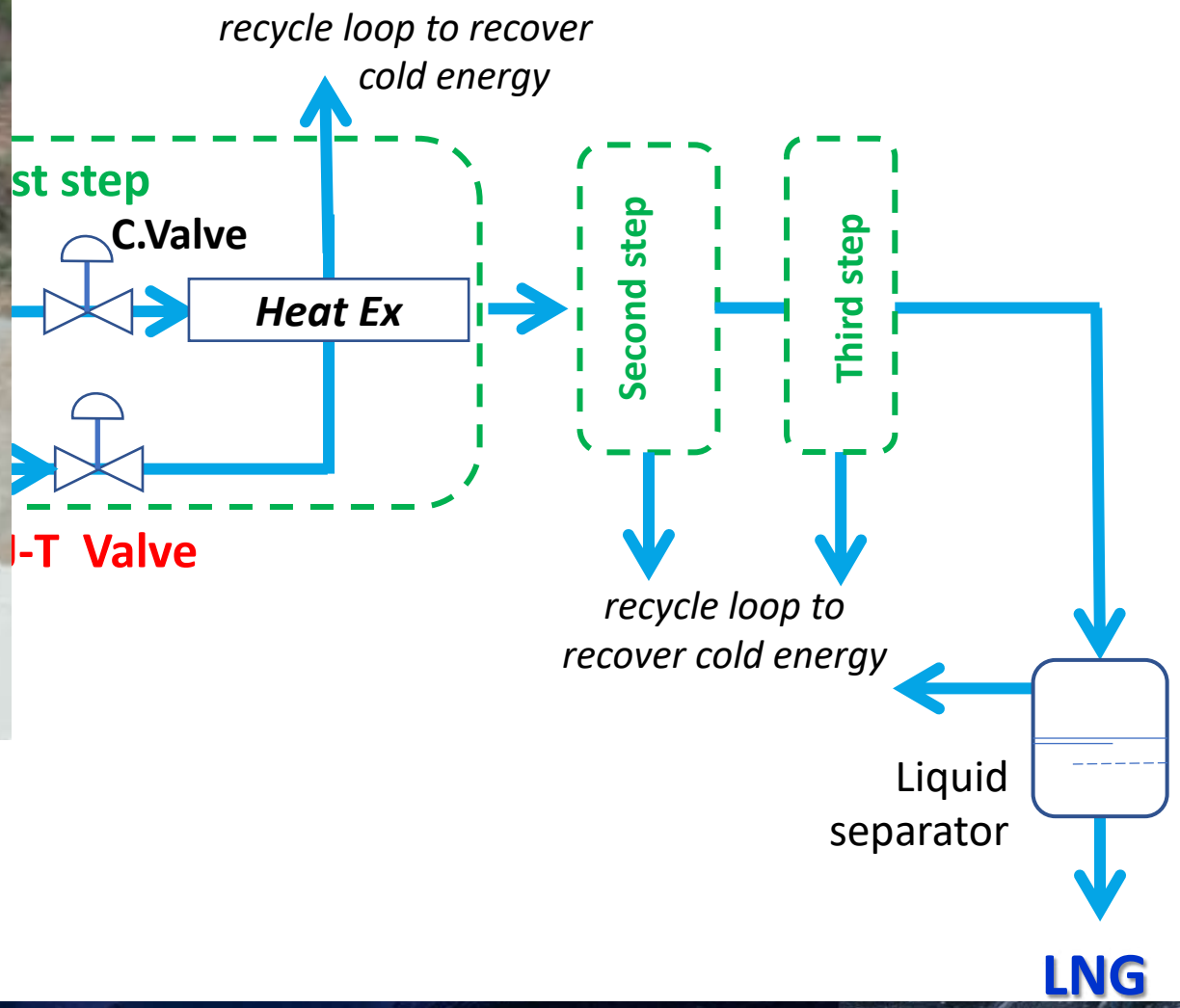

# Our Linde Cycle Scheme

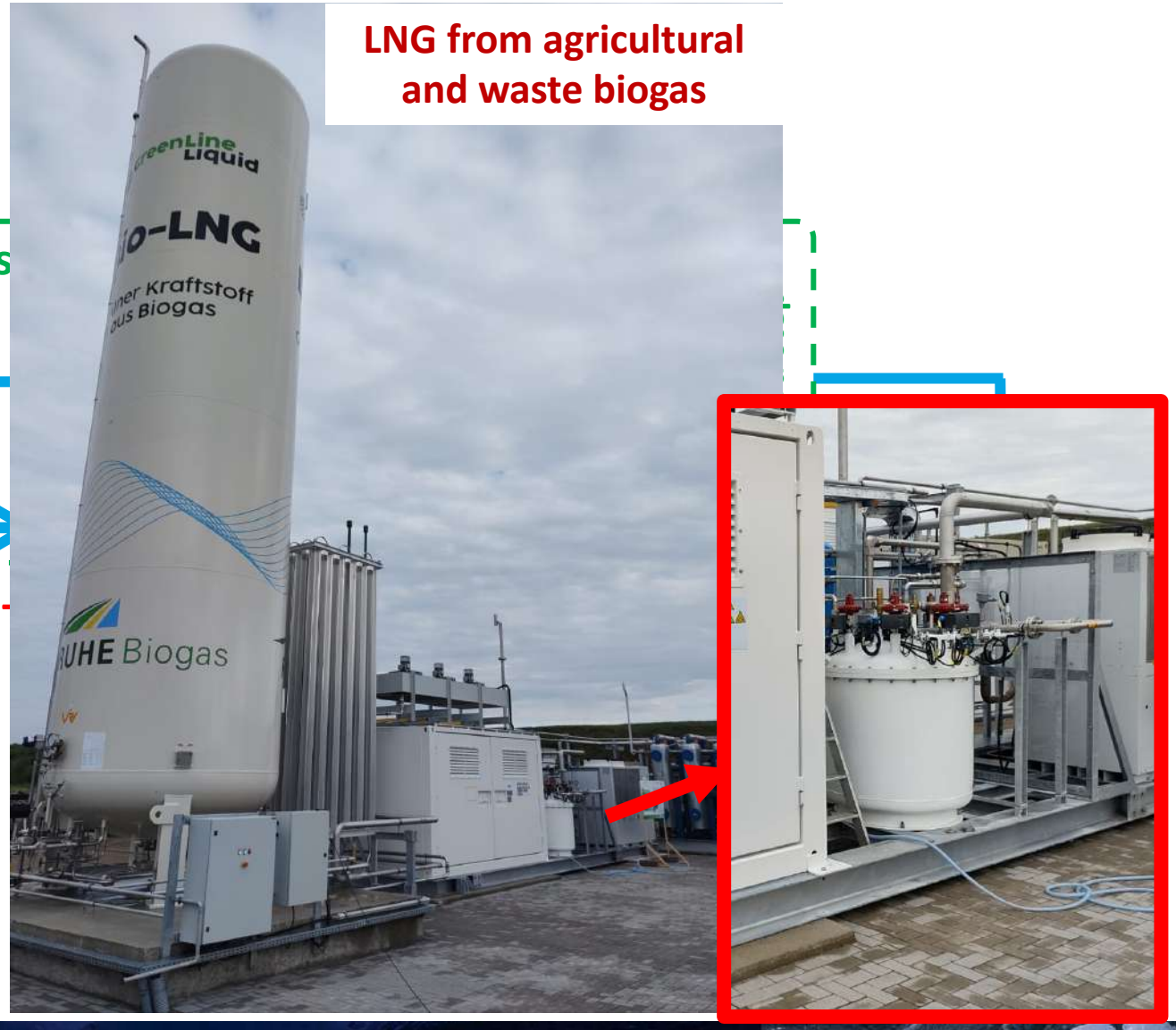

# Our Linde Cycle Scheme

**Minimum LNG pressure : 2 bar.g (-147°C)**

**Specific consumption : 0,70-0,95 kWh/kg $_{LNG}$**

increasing only with lower final pressure

**Optimum field of application : 3 - 25 t/d**

Easier process due to the highest critical temperature: by increasing the working pressure to intermediate values it is possible to contain the need for cooling

Medium values may be:

- pressure 20 bar
- temperature -20 ° C

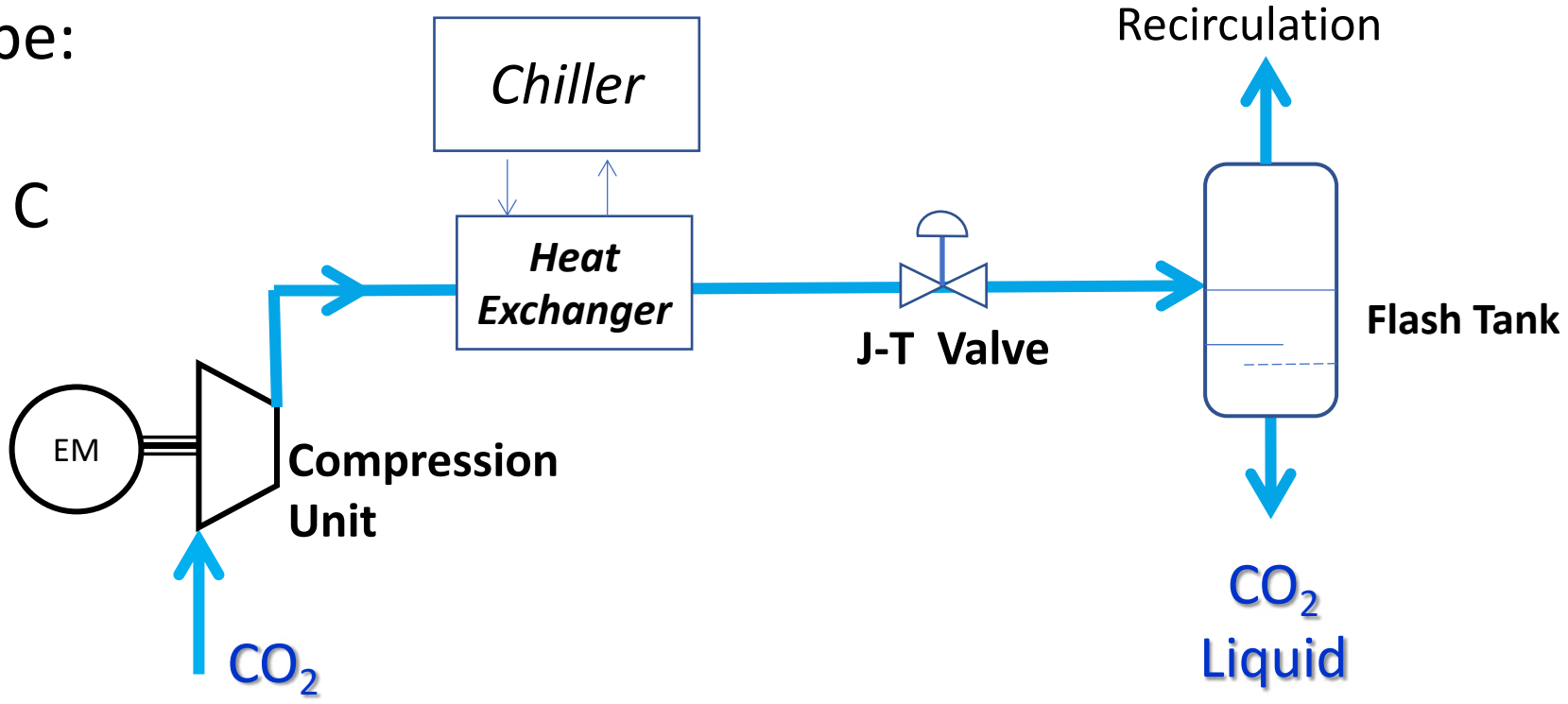

Importance of the **purity** which, for use in the **food sector**, must reach very high values, and dedicated purification technologies are required.

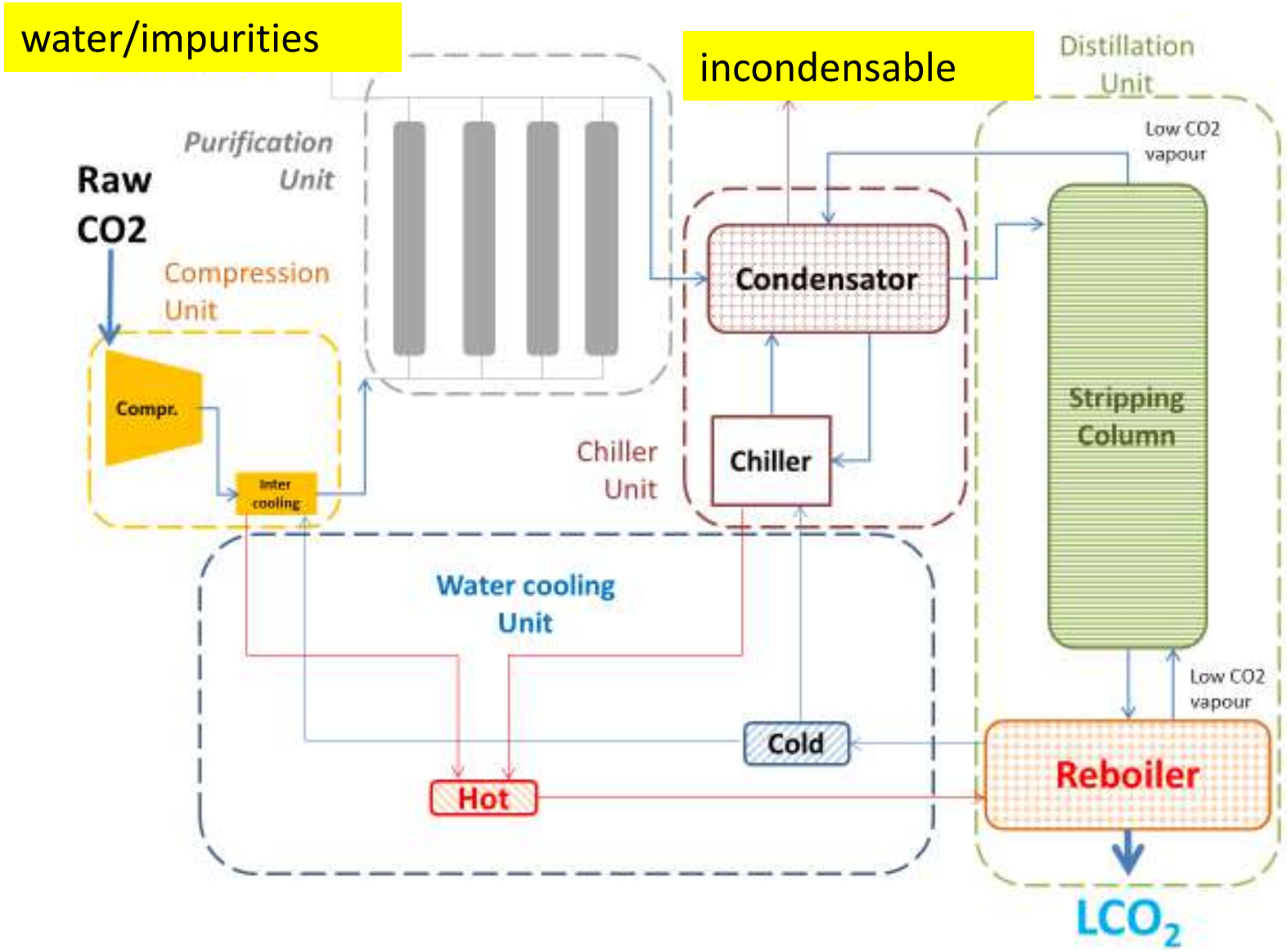

# On board

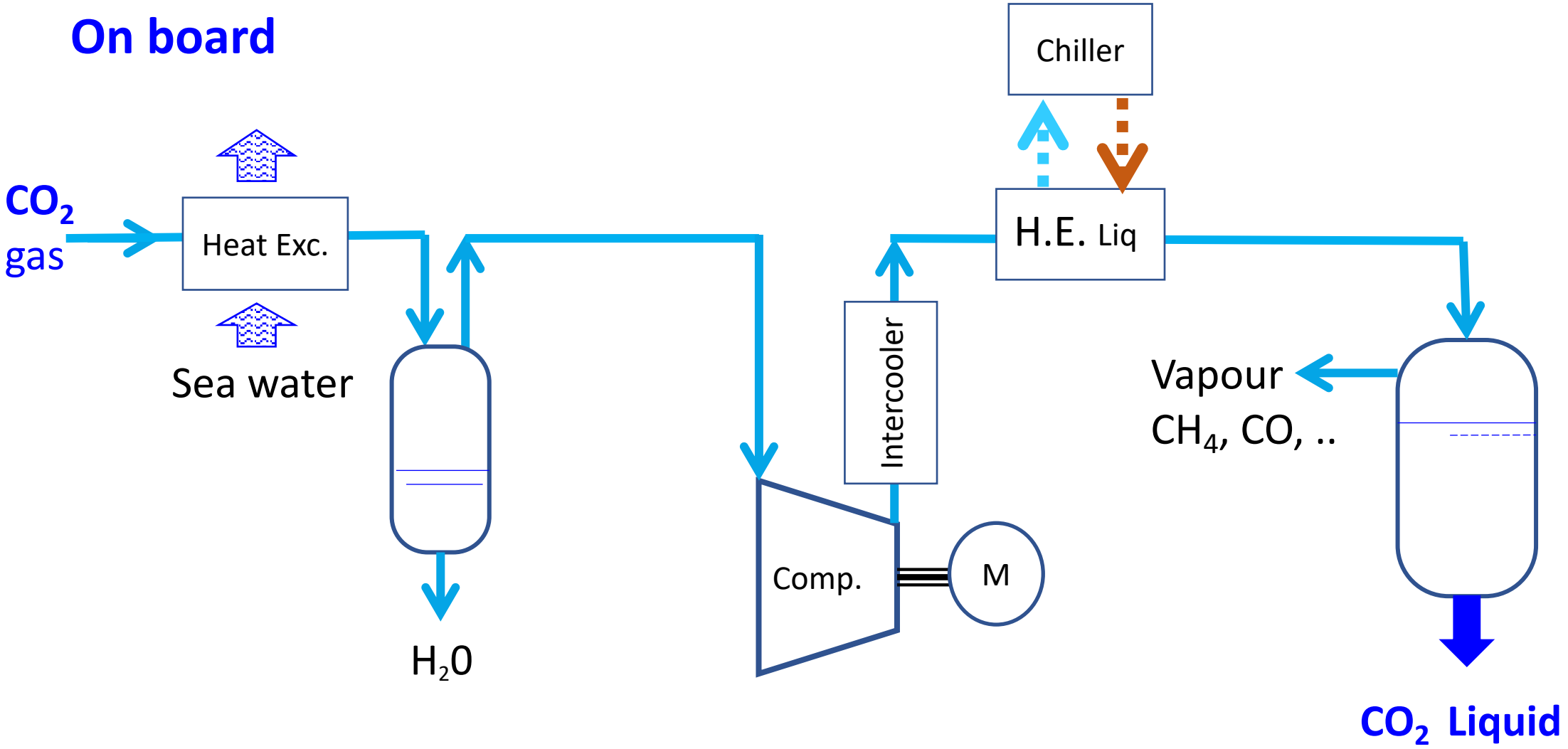
$CO_2$ gas
Heat Exc.
Sea water
$H_20$
Comp.
M
Intercooler
H.E. Liq
Chiller
Vapour
$CH_4$, CO, ..
$CO_2$ Liquid

# On board

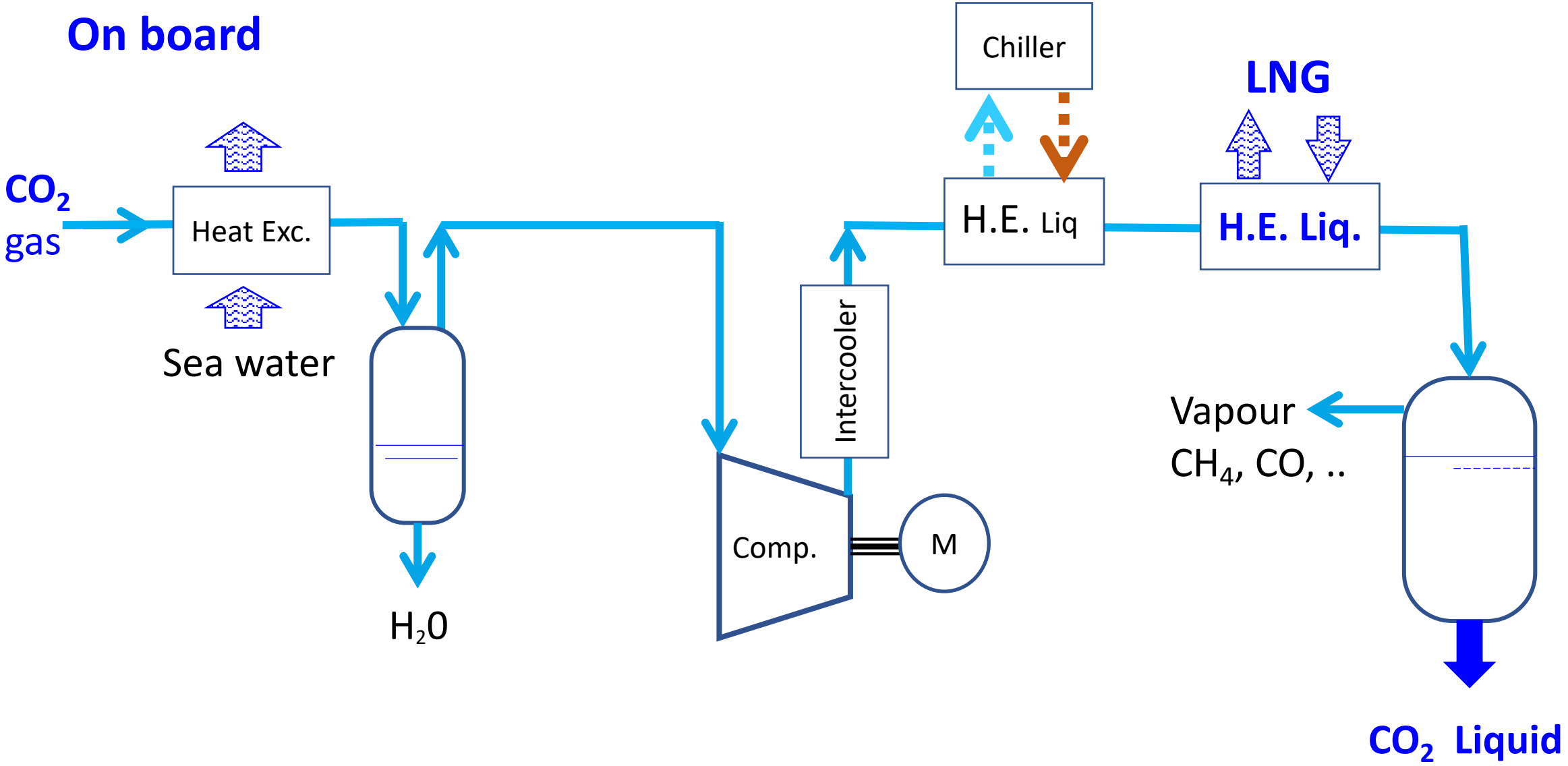
Chiller
LNG
$CO_2$ gas
Heat Exc.
H.E. Liq
H.E. Liq.
Sea water
Intercooler
Vapour
$CH_4$, CO, ..
Comp.
M
$H_2O$
$CO_2$ Liquid

# Thanks

# Carlo Maria Bartolini

ECOSPRAY
technologies for the planet